H Supply
Multifamily Cabinets

Cabinet Construction
FRAMELESS

Base Cabinets

1. **Screw Plate**
2. **Drawer Box** *⅝" Melamine Particle Board*
3. **Side-Mount Epoxy Slides**
4. **Half-Depth Adjustable Shelf** *¾" Melamine Particle Board*
5. **Top Stretcher**
6. **Back Panel** *¼" Melamine MDF*
7. **Bottom** *⅝" Melamine Particle Board*
8. **Side Panel** *⅝" Melamine Particle Board*
9. **Toekick** *⅝" Melamine Particle Board*
10. **Hinge Plate**
11. **Hinge**
12. **Drawer Front** *Thermofoil MDF, Melamine MDF, Paint MDF, Solid Wood Shaker*
13. **Doors** *Thermofoil MDF, Melamine MDF, Paint MDF, Solid Wood Shaker*

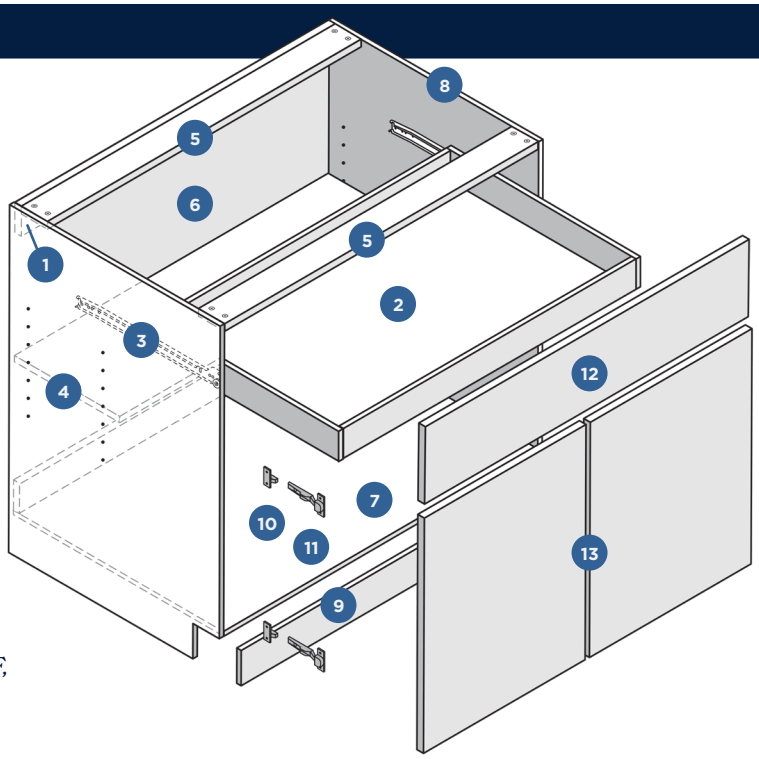

Wall Cabinets

14. **Screw Plate**
15. **Top** *⅝" Melamine & Particle Board*
16. **Back Panel** *¼" Melamine & MDF*
17. **Full-Depth Shelf** *¾" Melamine & Particle Board*
18. **Bottom** *⅝" Melamine & Particle Board*
19. **Side Panel** *⅝" Melamine & Particle Board*
20. **Hinge Plate**
21. **Hinge**
22. **Doors** *Thermofoil MDF, Melamine MDF, Paint MDF, Solid Wood Shaker*

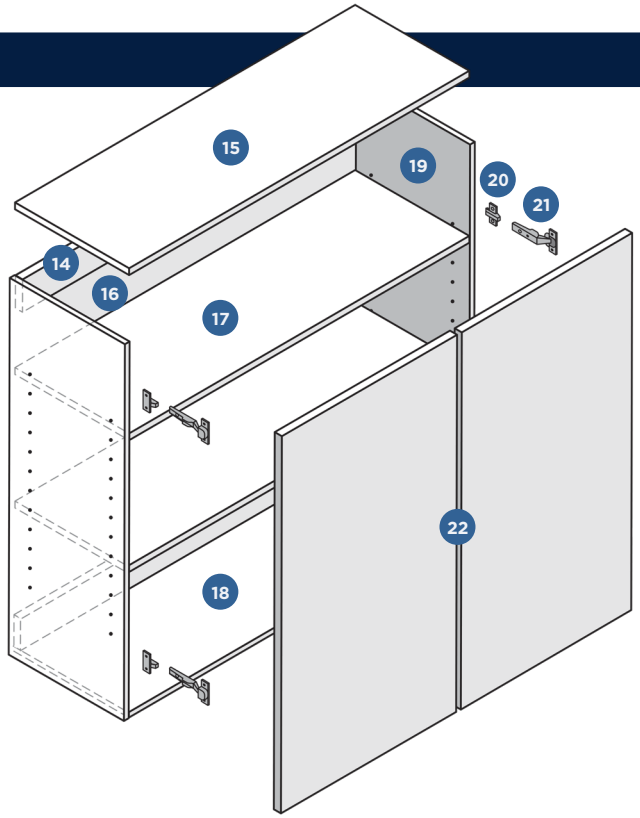

QUESTIONS?

(980) 722-4512

Sales@HSupplyLLC.com

1235 Technology Drive
Indian Trail, North Carolina 28079