H Supply
Multifamily Cabinets

Cabinet Construction
FRAMED

Base Cabinets

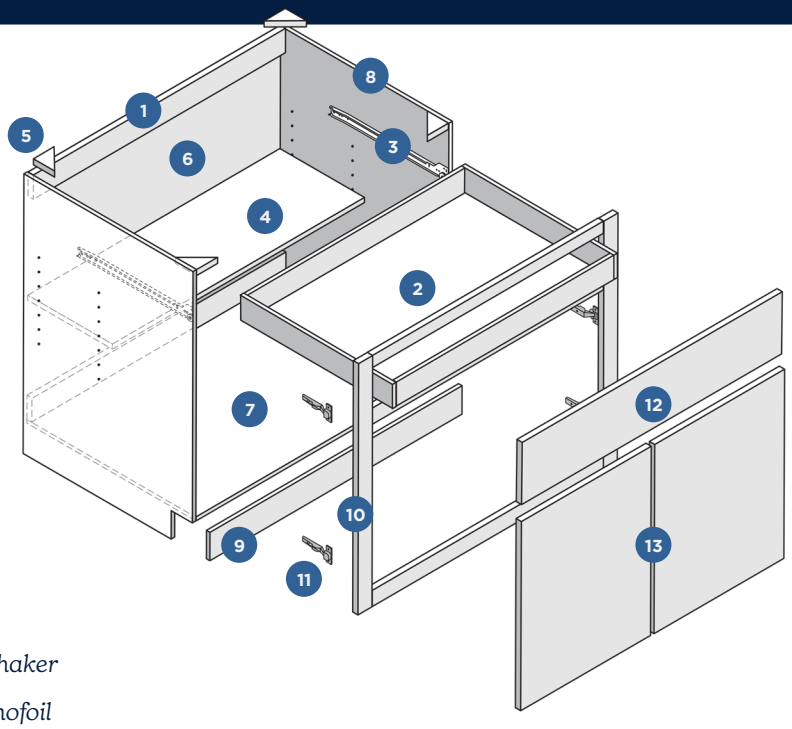

1. **Screw Plate**
2. **Drawer Box** *⅝" Standard Plywood Box or Dovetail (upgrade)*
3. **Drawer Slides** *Side-Mount Epoxy Slides or Full-Ext. Undermount Soft-Close (upgrade)*
4. **Half-Depth Adjustable Shelf** *¾" Plywood*
5. **Corner Supports**
6. **Back Panel** *¼" Plywood*
7. **Bottom** *½" Plywood*
8. **Side Panel** *½" Plywood*
9. **Toekick** *½" Plywood*
10. **Face Frame** *¾" Solid Wood*
11. **Hinge** *Standard or Soft-Close (upgrade)*
12. **Door & Drawer Style** *Flat Slab, Shaker, Slim Shaker*
13. **Door & Drawer Finish** *Painted, Stained, Thermofoil*

Wall Cabinets

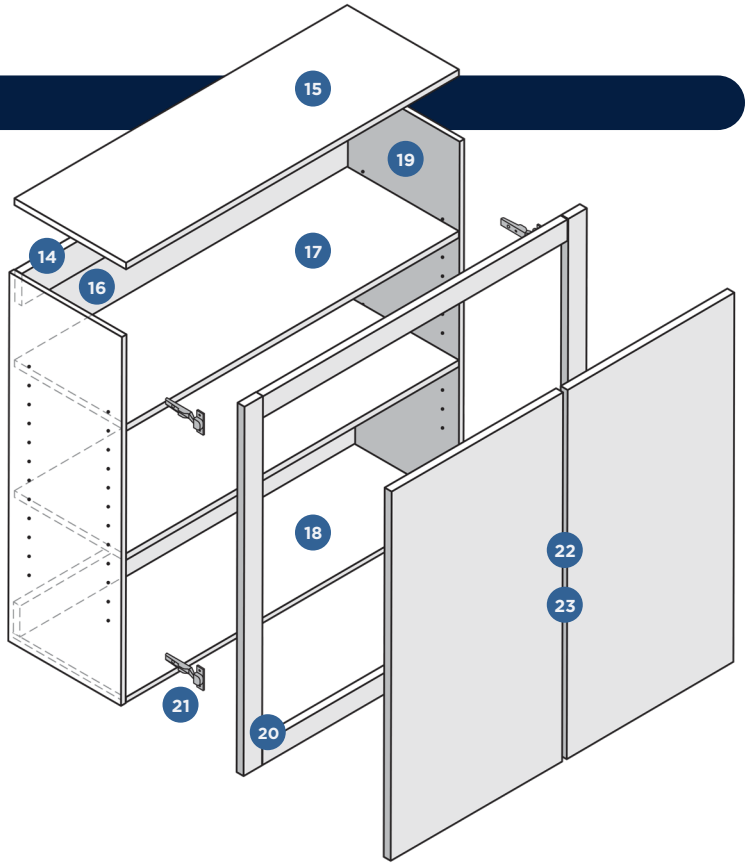

14. **Screw Plate**
15. **Top** *½" Plywood*
16. **Back Panel** *¼" Plywood*
17. **Full-Depth Shelf** *¾" Plywood*
18. **Bottom** *½" Plywood*
19. **Side Panel** *½" Plywood*
20. **Face Frame** *¾" Solid Wood*
21. **Hinge** *Standard or Soft-Close (upgrade)*
22. **Door & Drawer Style** *Flat Slab, Shaker, Slim Shaker*
23. **Door & Drawer Finish** *Painted, Stained, Thermofoil*

QUESTIONS?

(980) 722-4512

Sales@HSupplyLLC.com

1235 Technology Drive
Indian Trail, North Carolina 28079

HSupplyLLC.com