RTA CABINET ASSEMBLY INSTRUCTIONS

BASE CABINET

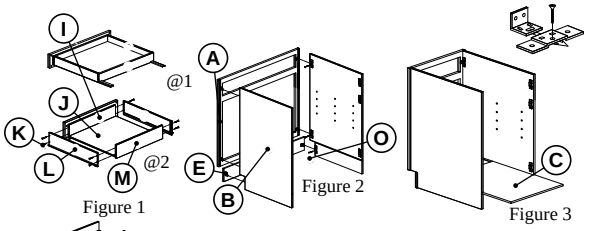

Figure 1 Figure 2 Figure 3

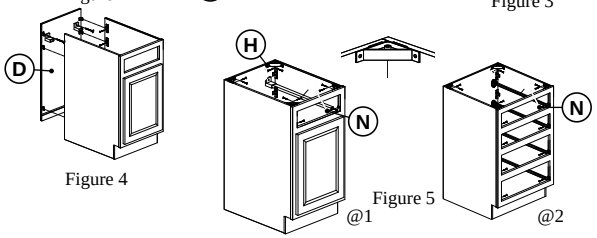

Figure 4 Figure 5

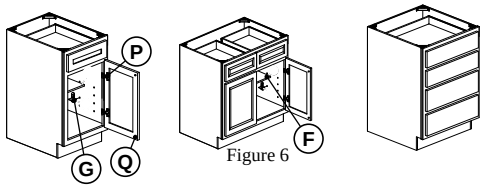

Figure 6

SINK BASE

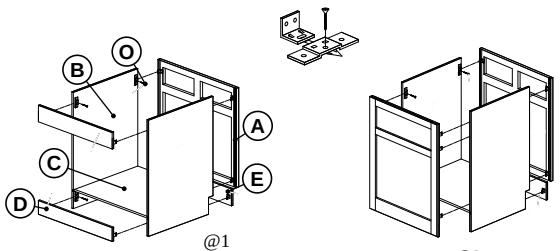

Figure 1

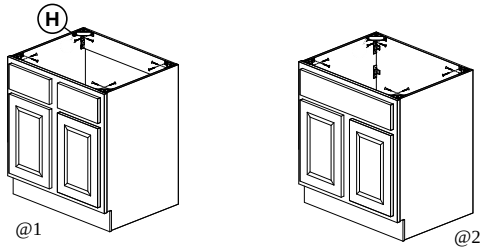

Figure 2

WALL CABINET

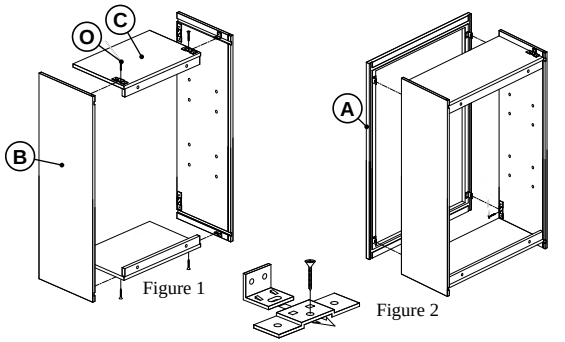

Figure 1 Figure 2

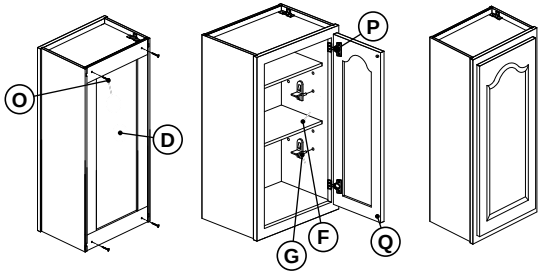

Figure 3 Figure 4

PANTRY / UTILITY

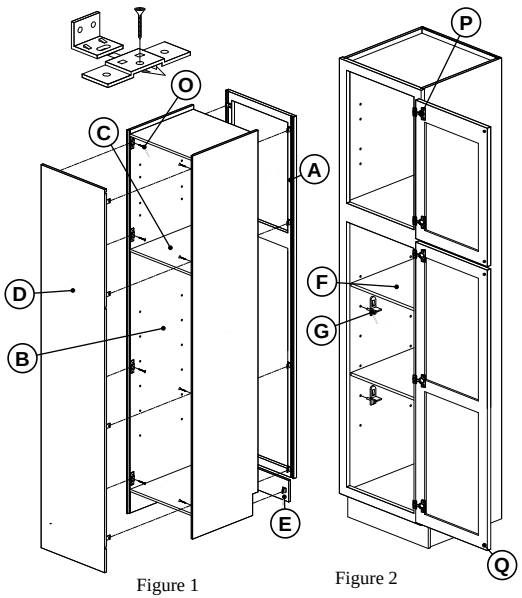

Figure 1 Figure 2

VANITY

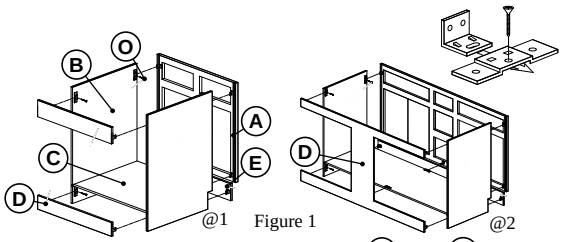

Figure 1

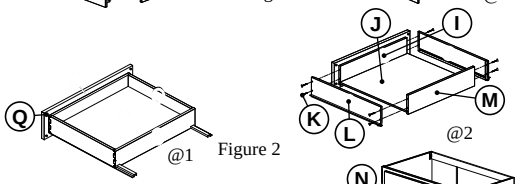

Figure 2

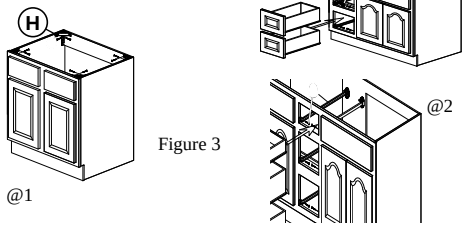

Figure 3

WHAT'S IN THE BOX

Each box is a complete ready-to-assemble cabinet: **all finished wooden components, all hardware, and these instructions.**

How to use: find your cabinet type, then follow the figures in order (Figure 1, 2, 3...). @1 / @2 show close-up details. Part letters are the same on every drawing.

PARTS KEY

A	Face frame with door(s)	**H**	Corner brace
B	Side panel	**I J L M**	Drawer parts
C	Top / middle / bottom panel	**K**	Drawer screws
D	Back panel / rails	**N**	Drawer glide / slide
E	Toe kick	**O**	Assembly screw
F	Shelf	**P**	Hinges
G	Shelf support clip	**Q**	Silencer (bumper)

Not every cabinet uses every part.